Neutral Switch Signal (M/T)

This signals the ECM when the transmission is in neutral.

Inspection of neutral switch signal.

Check for an open in the circuit:
1. Turn the ignition switch ON (II).
2. Measure voltage between ECM connector terminals B4 and A26.

Is there voltage?

YES

Check for an open in the wire:
1. Turn the ignition switch OFF.
2. Disconnect the 3P connector from the neutral switch.
3. Connect neutral switch connector terminals No. 1 to No. 3.
4. Turn the ignition switch ON (II).
5. Measure voltage between ECM connector terminals B4 and A26.

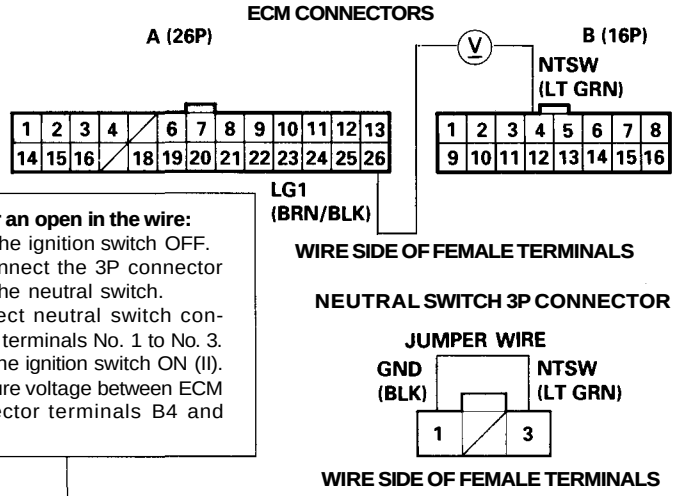

Is there voltage?

NO — **Replace the neutral switch (see section 13).**

YES

- **Repair open in the wire between the ECM (B4) and the neutral switch.**
- **Repair open in BLK wire between the neutral switch and G101 (located at right middle of engine).**

NO

Check for a short in the circuit:
1. Shift transmission into gear.
2. Measure voltage between ECM connector terminals B4 and A26.

Is there approx. 5 V?

YES

Neutral switch signal is OK.

NO

Check for a short in the wire:
1. Turn the ignition switch OFF.
2. Disconnect the ECM connector B (16P) from the ECM.
3. Disconnect the 3P connector from the neutral switch.
4. Check for continuity between ECM connector terminal B4 and body ground.

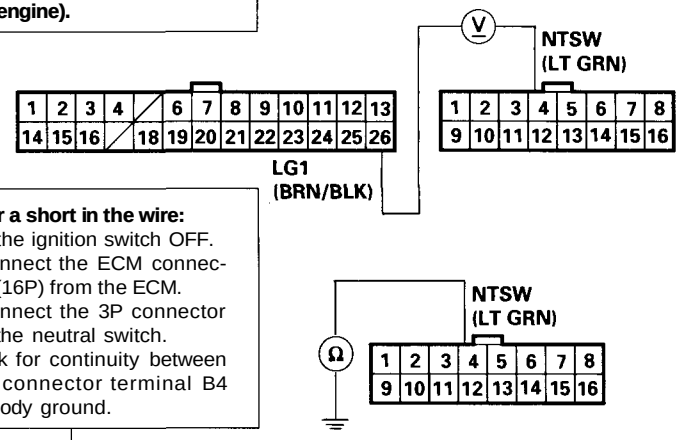

Is there continuity?

YES — **Repair short in the wire between the ECM (B4) and the neutral switch.**

NO

- **Replace neutral switch (see section 13).**
- **Substitute a known-good ECM and recheck. If prescribed voltage is now available, replace the original ECM.**

carpiagram.com